Lithium Iron Phosphate (LiFePO4) Battery

51.2V300Ah

Features Of LiFePO4 Battery

Longer Cycle Life: Offers up to 20 times longer cycle life and five times longer float/calendar life than lead acid battery, helping to minimize replacement cost and reduce total cost of ownership.

Lighter Weight: About 40% of the weight of a comparable lead acid battery. A 'drop in' replacement for lead acid batteries.

Higher Power: Delivers twice power of lead acid battery, even high discharge rate, while maintaining high energy capacity.

Wider Temperature Range: -20℃~60℃.

Superior Safety: Lithium Iron Phosphate chemistry eliminates the risk of explosion or combustion due to high impact, overcharging or short circuit situation.



Physical Dimension-mm

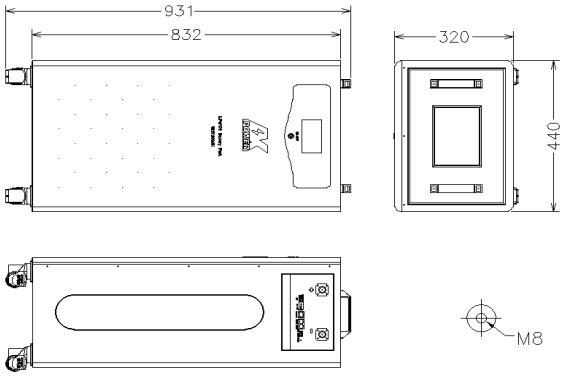

Typical Applications

- Emergency standby power source
- Solar/wind energy storage
- Back-up power for UPS
- Distributed PV self-use
- Off-grid independent power supply
- Save money on electricity

Specification

Electrical Characteristics	Nominal Voltage	51.2V
	Nominal Capacity	300Ah
	Energy	15360 Wh
	Internal Resistance(AC)	≤20mΩ
	Cycle Life	>10000 cycles @0.5C 80%DOD
	Months Self Discharge	<3%
	Efficiency of Charge	100% @0.5C
	Efficiency of Discharge	96~99% @1C
Standard Charge	Charge Voltage	58.4 ±0.2V
	Charge Mode	0.5C to 58.4V, then 58.4V,charge current to 0.02C (CC/CV)
	Charge Current	100A
	Max. Charge Current	200A
	Charge Cut-off Voltage	58.4±0.2V
Standard Discharge	Rated Discharge Current	100A
	Max. Discharge Current	200A
	Discharge Cut-off Voltage	40 ±0.2V
Environmental	Charge Temperature	0℃ to 55℃ (32F to 131F) @60±25% Relative Humidity
	Discharge Temperature	-20℃ to 60℃ (-4F to 140F) @60±25%Relative Humidity
	Storage Temperature	-20℃ to 45℃ (-4F to 113F) @60±25% Relative Humidity
	Case	Sheet Metal
Mechanical	Approx. Dimensions	440mm * 320mm * 832mm (17.32in *12.6in * 32.76in)
	Approx. Weight	139kg (305.8lbs)
	Terminal	M8
Other	Communication method	ALL IN ONE "CAN"
	Communication method	Bluetooth & Wi-Fi application /Touch screen, Arabic and English

Lithium Iron Phosphate (LiFePO4) Battery
51.2V300Ah

Different Rate Discharge Curve(25℃)

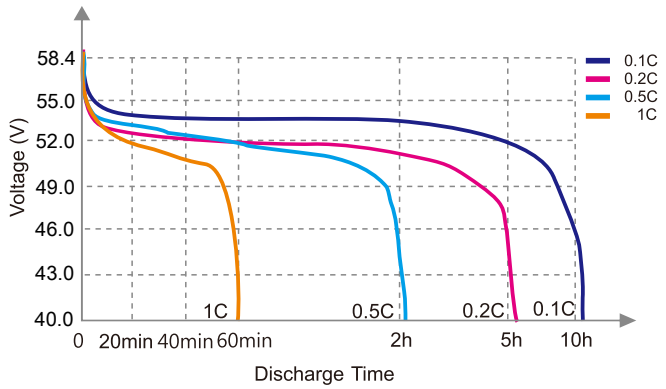

Different Temperature Discharge Curve(0.5C)

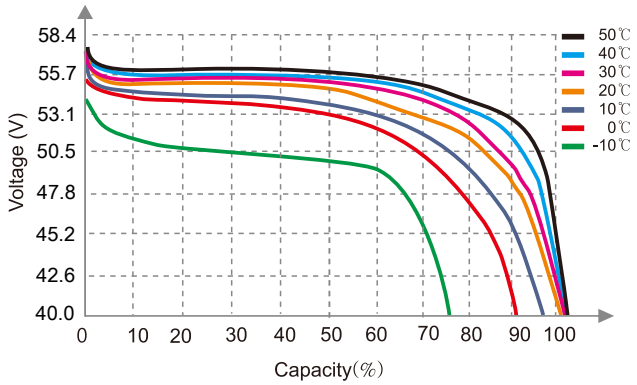

State of Charge Curve(0.5C, 25℃)

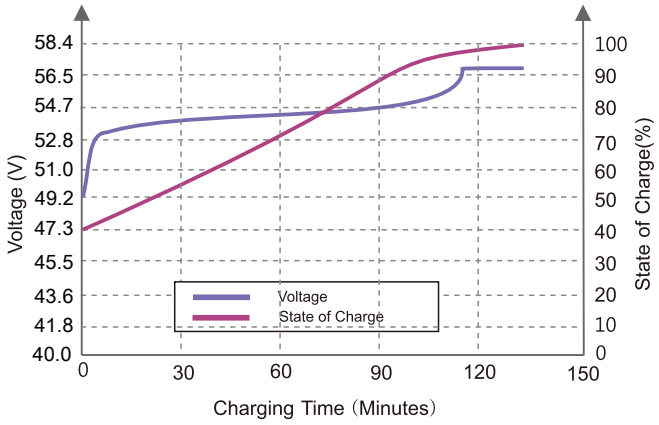

Charging Characteristics(0.5C, 25℃)

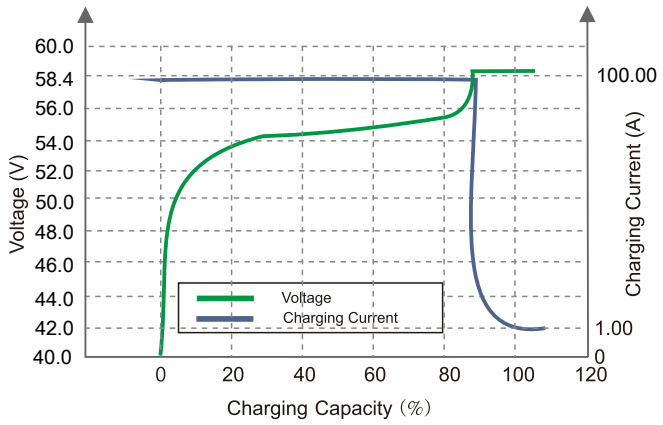

Different DOD Discharge Cycle Life Curve(0.5C)

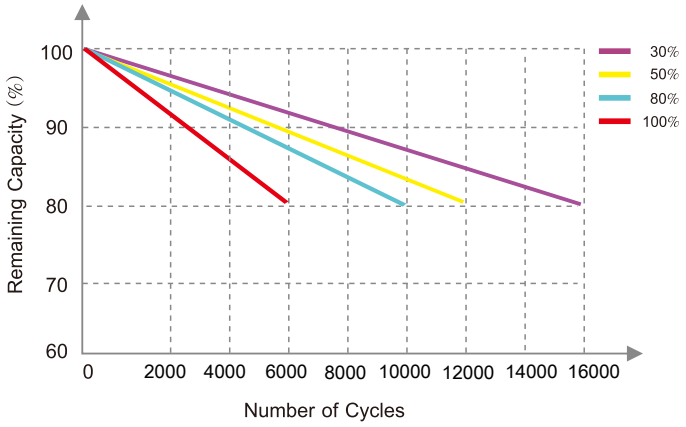

Different Temperature Self Discharge Curve

